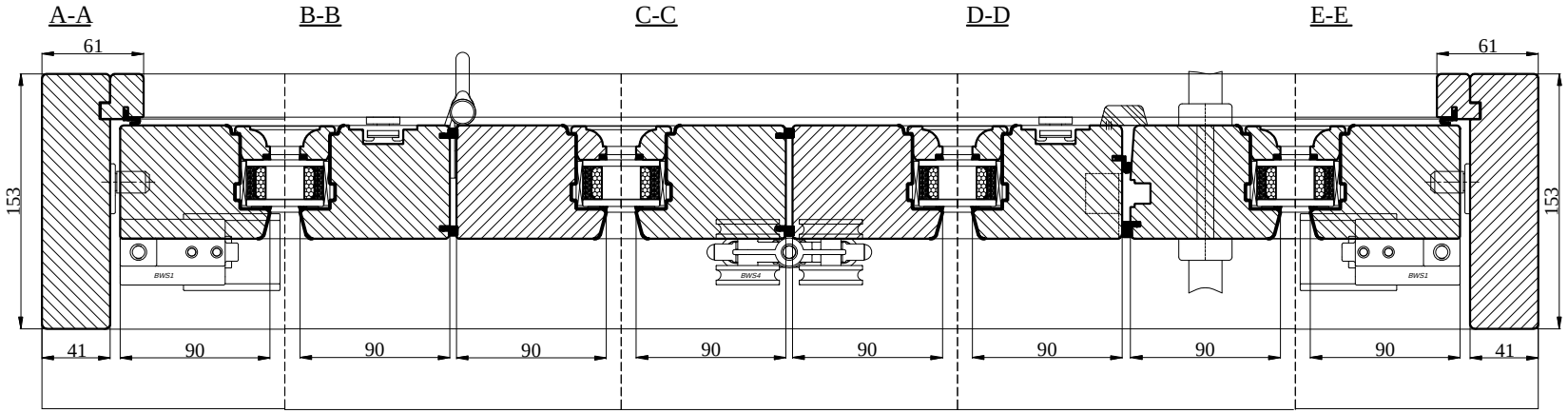
A-A
B-B
C-C
D-D
E-E
61
61
153
153
41
90
90
90
90
90
90
90
90
41
BWS1
BWS4
BWS1

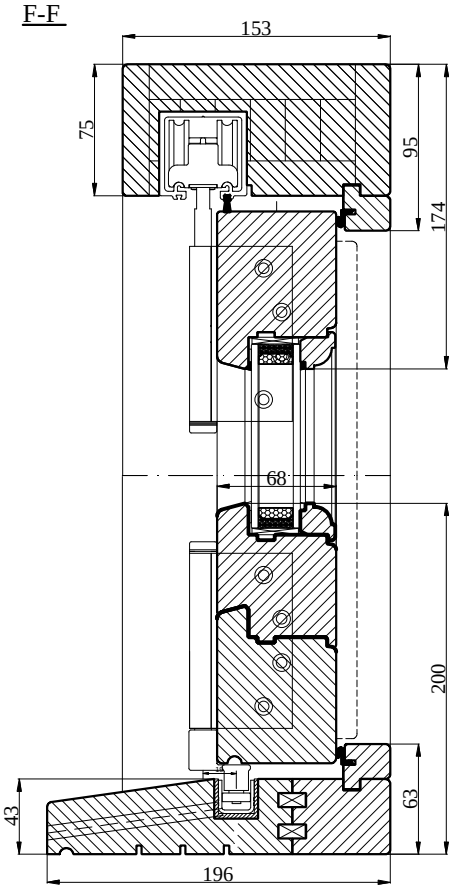
F-F
153
75
95
174
68
200
63
43
196

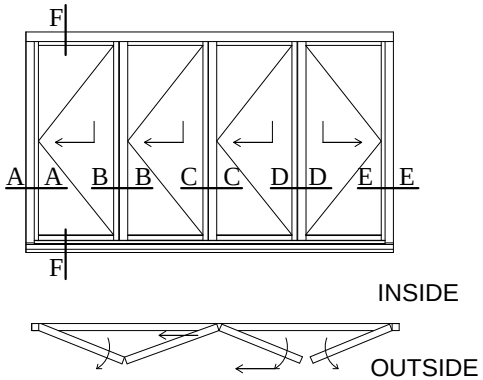
F
A A B B C C D D E E
F
INSIDE
OUTSIDE

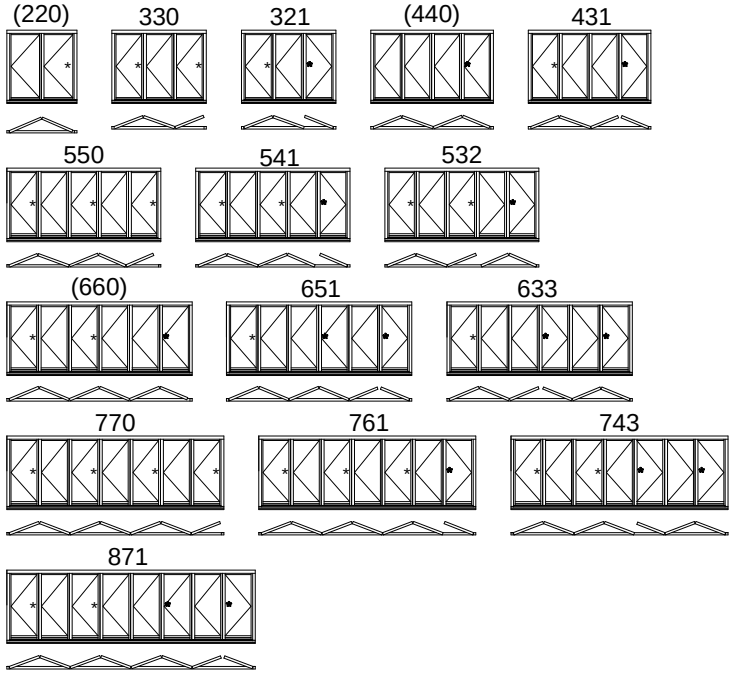
(220)
330
321
(440)
431
550
541
532
(660)
651
633
770
761
743
871